TEAR SHEET

Galahad Large Linear Chandelier
Item # TOB 5715BZ

Designer: Thomas O'Brien

O/A Height: 69"
Fixture Height: 32.5"
Min. Custom Height: 49.75"
Width: 49.75" x 16"
Canopy: 5.5" x 29.5" Decorative
Finishes: AN, BZ, HAB, PN
Trim Options: WG
Lightsource: Dedicated LED
Wattage: 50w (4000lm)
Weight: 37 Pounds
Note: Custom Height Available

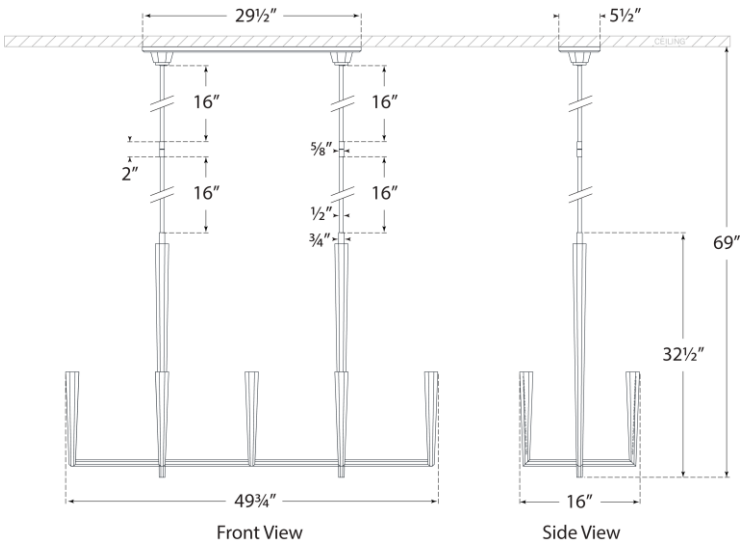

VISUAL COMFORT & CO.