TEAR SHEET

Boston Pendant

Item # SL 5125PN/SLD-PN

Designer: Chapman & Myers

O/A Height: 50.25"
Min. Custom Height: 14"
Width: 7.25"
Canopy: 4.5" Round
Finishes: AN, BZ, HAB, PN
Shade Treatments: N/A, AN, BZ, HAB, PN, WG
Socket: E26 Keyless
Wattage: 100 A19
Weight: 5 Pounds
Note: Custom Height Available
©EFC DESIGNS

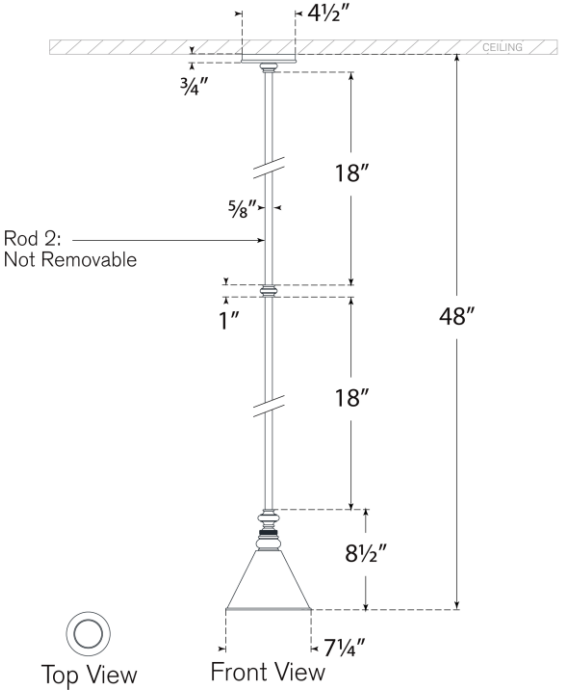

VISUAL COMFORT & CO.