TEAR SHEET

Cora Medium Waterfall Chandelier

Item # CHC 5911AB-ALB

Designer: Chapman & Myers

Height: 32"
Width: 40.75"
Canopy: 7" Round
Finishes: AB
Trim Options: ALB
Socket: 42 - E12 Candelabra
Wattage: 42 - 3.5 LED B11
Weight: 121 Pounds
Note: Assembly Required | Alabaster is a Natural Stone | Variations in Color and Texture are Expected

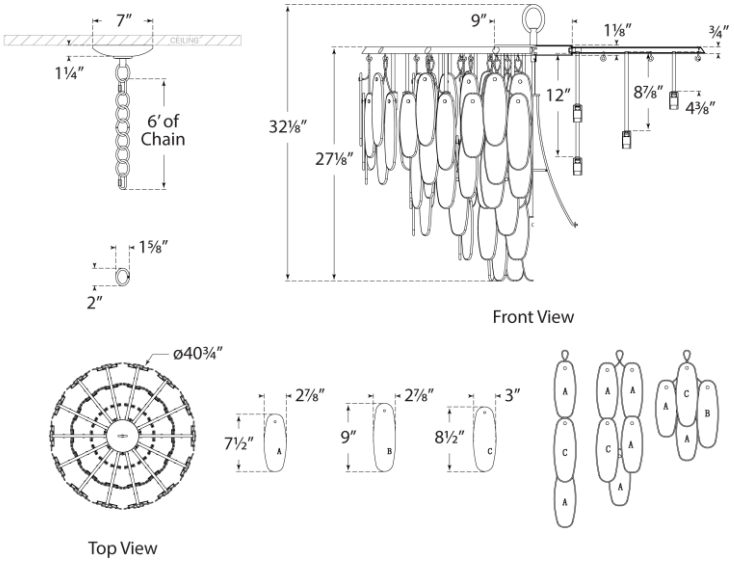

VISUAL COMFORT & CO.